MOOG

www.moogparts.eu

HY-SB-7087

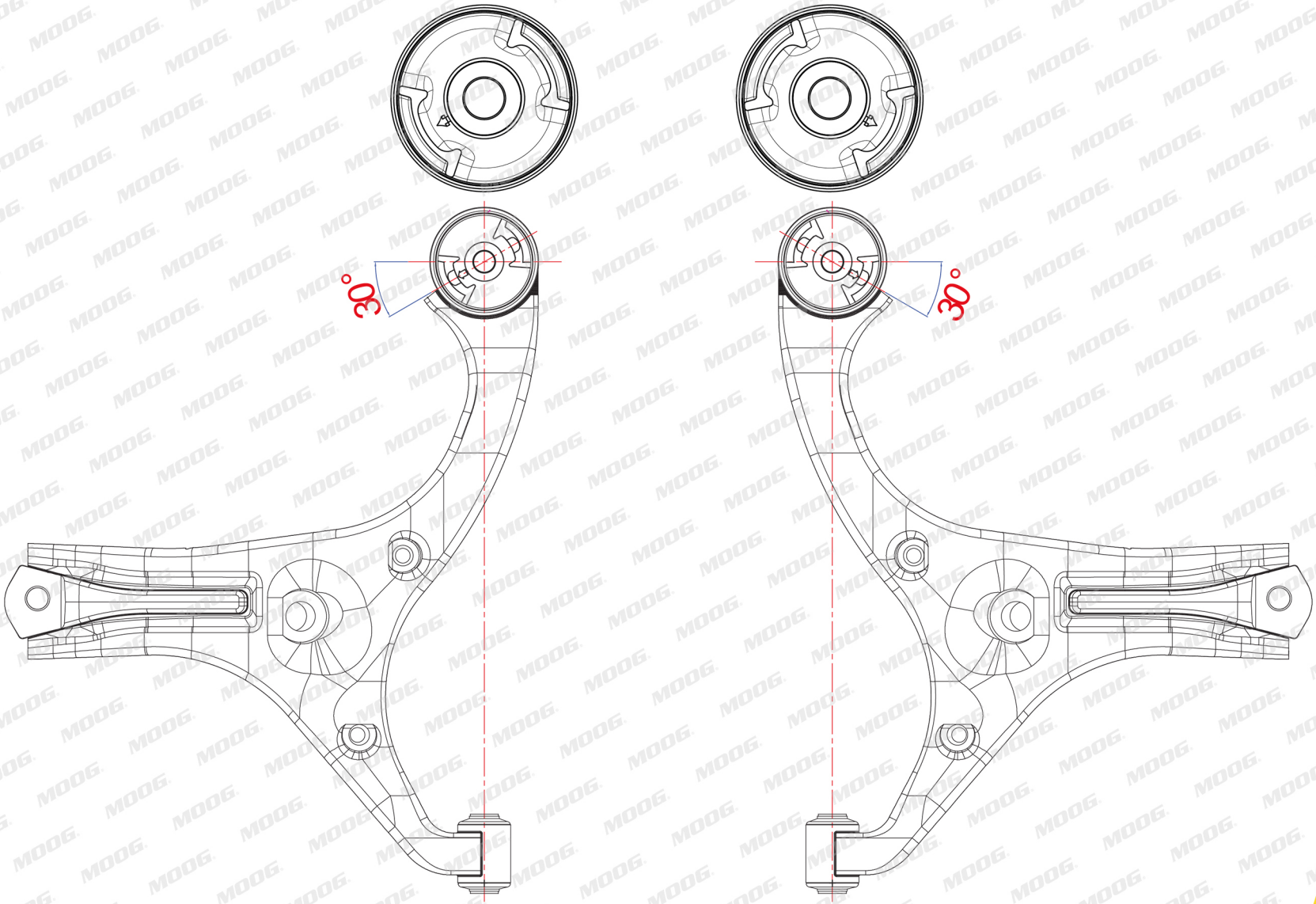

MOOG GUARANTEE 3 YEARS